Theoretic Mass(kg)		Revision	
Surface Area(dm2)			

Thread	Hole	Shaft

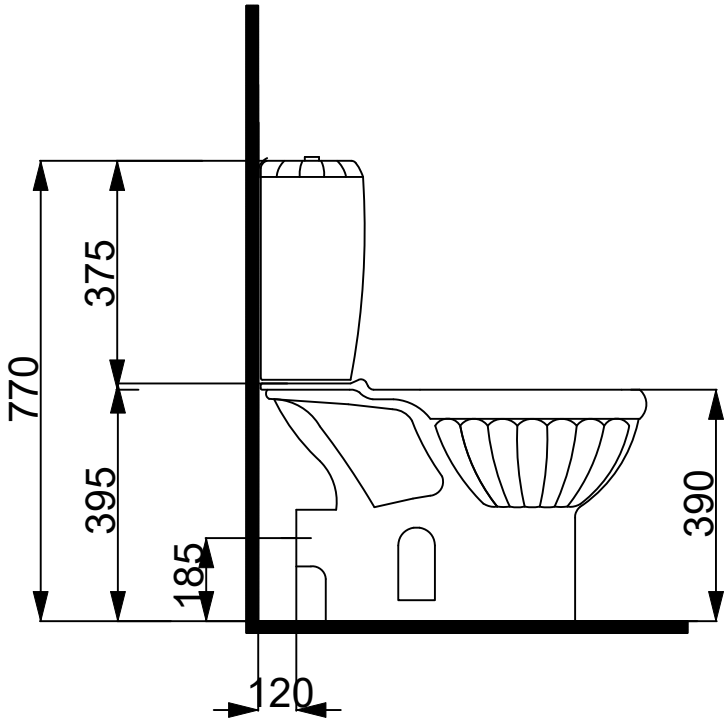

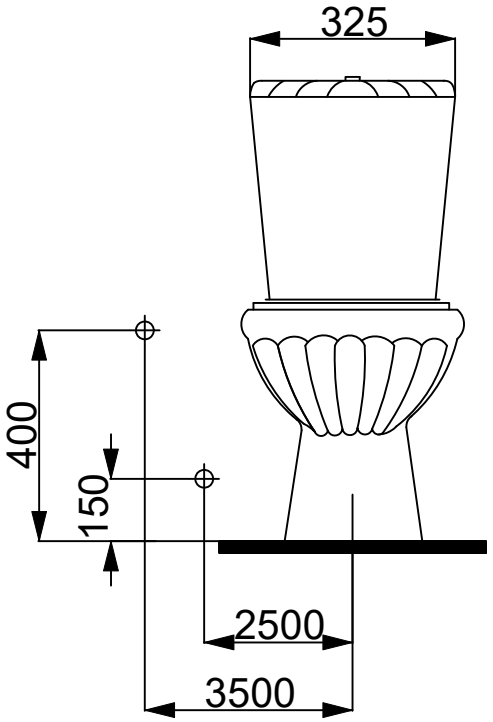

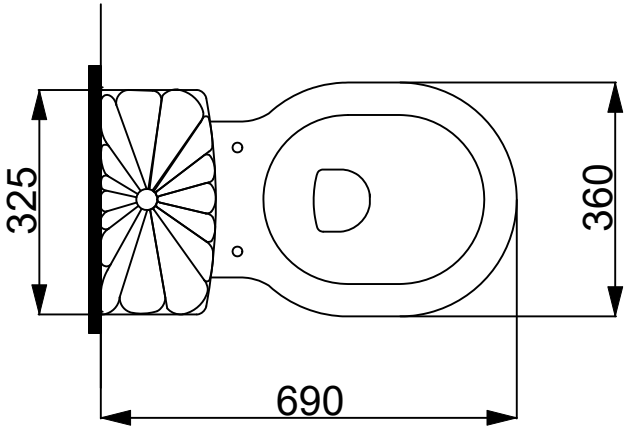

MİDYE KLOZET +
REZERVUAR 4435+4530

item	Quantity

This drawing can only be used for the intended purposes. Unauthorized copying is strictly prohibited.

R.S	Description

	Drawing By	Controlled By	Approved By	Drawing No	Scale
NAME				0005	

VİBA seramik