Theoretic Mass(kg)		Revision	
Surface Area(dm2)			

Thread	Hole	Shaft

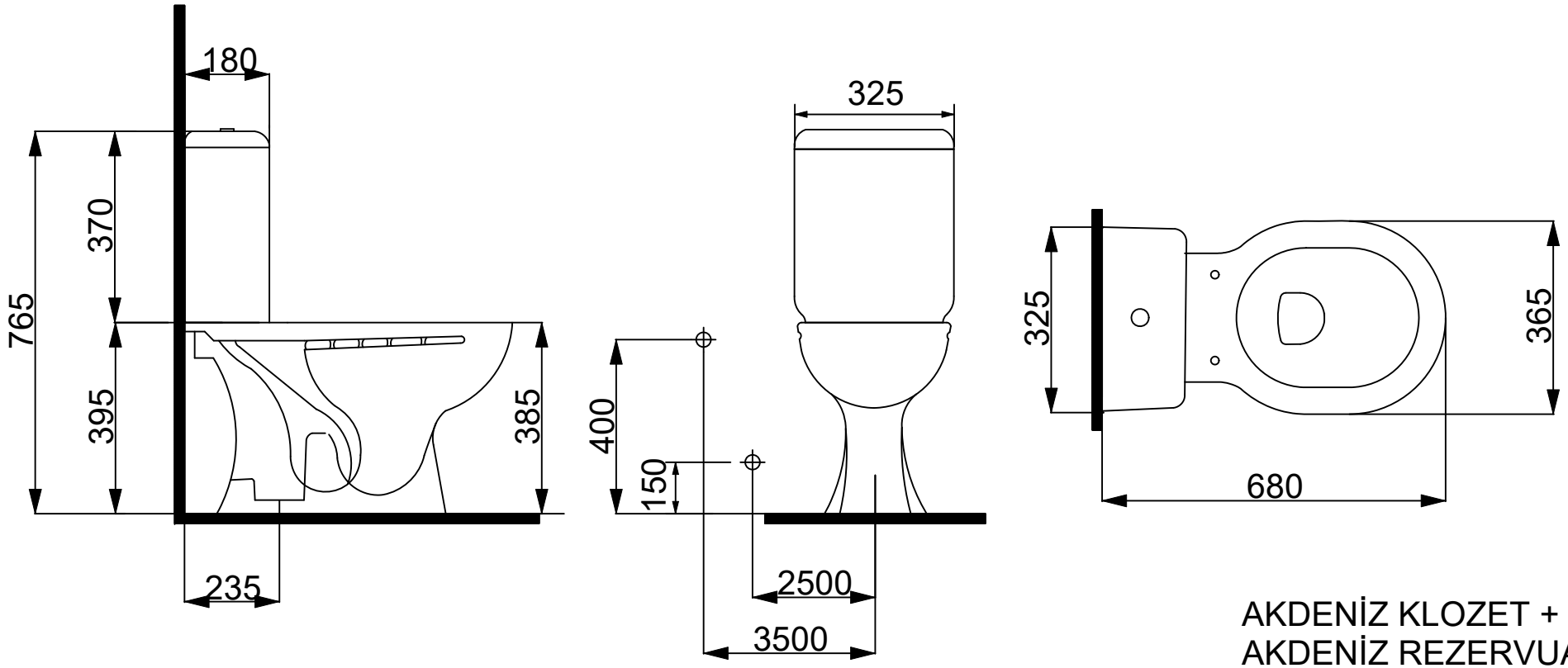

AKDENİZ KLOZET +
AKDENİZ REZERVUAR
4325-4510

item	Quantity

This drawing can only be used for the intended purposes. Unauthorized copying is strictly prohibited.

R.S	Description

	Drawing By	Controlled By	Approved By	Drawing No	Scale
NAME				0004	

VİBA seramik