Theoretic Mass(kg)		Revision	
Surface Area(dm2)			

Thread	Hole	Shaft

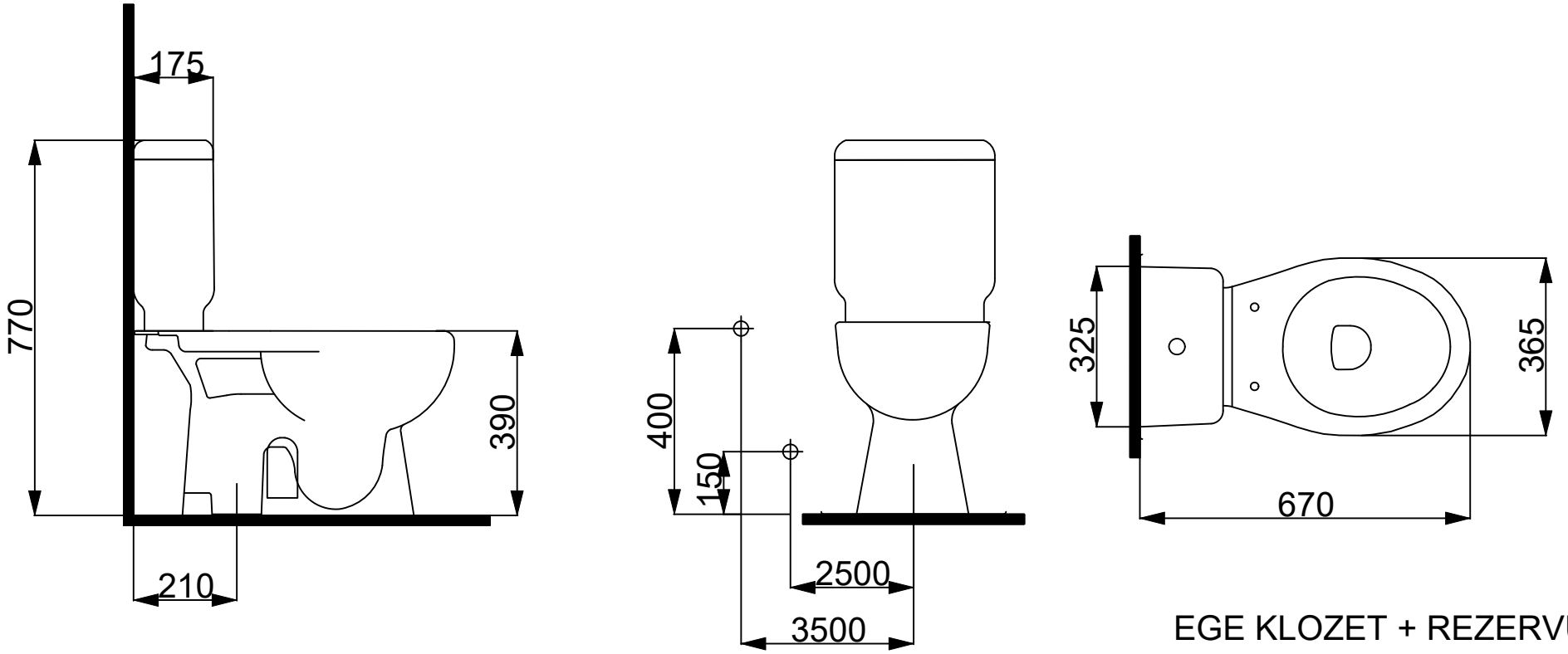

EGE KLOZET + REZERVUAR
4315+4510

item	Quantity

This drawing can only be used for the intended purposes. Unauthorized copying is strictly prohibited.

R.S	Description

	Drawing By	Controlled By	Approved By	Drawing No	Scale
NAME				0002	

VIBA seramik